## Competitive Edge

The patent pending *Four-Bar Steering Mechanism*™ is the only **vertical steering axis** design available for motorcycles. The advantage of having a vertical steering axis include:

1. **More controllable motorcycle on rougher roads.** Road imperfections tending to steer the wheel will not be fed back into the handlebars like it does on standard forks equipped motorcycles. This is illustrated here in contrast with a theoretical worst case 90 degrees steering axis (courtesy of Tony Foale):

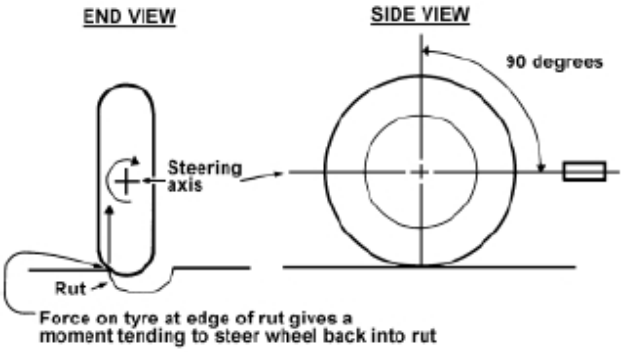


Fig. A.2 The effect of ruts on steering increases with rake angle, as shown in this exaggerated case. A vertical steering axis reduces the effect.

2. **Goodbye handlebar wobble** (movement, sometime violent, of the handlebar occurring at higher speeds). This is a result of the actual parts moving during steering being much lighter than on conventional forks. Eliminating steering dampers also mean a quicker steering available to the rider.

3. **Custom steering trail**. The trail is set by 2 spacers that can be replaced in minutes. Trail being the key value controlling handling characteristics now let the user choose the right value to match the road condition and their riding style (lower = more aggressive; higher = more stable).

4. **Reduced steering forces.** Does not raise the height of the center of gravity while steering.

5. **Reduced steering angle needed at the wheel to achieve the same turning radius as a standard fork**. This is a great advantage over other front swing arm steering design as it allows for narrower swing arm which gives more ground clearance in fully leaned turns.

## Expert point of view

**Tony Foale**, world wide recognized expert on motorcycle dynamics and author of "Motorcycle Handling and Chassis Design, the art and science", had this to say about the front suspension and steering presented here:

*"The Tier front motorcycle steering and suspension system is a refreshing novel and innovative approach to tackle many known problems inherent in conventional motorcycles."*

**The picture below shows an exploded view of the patent pending *Four-Bar Steering Mechanism*™ located inside the wheel hub:**

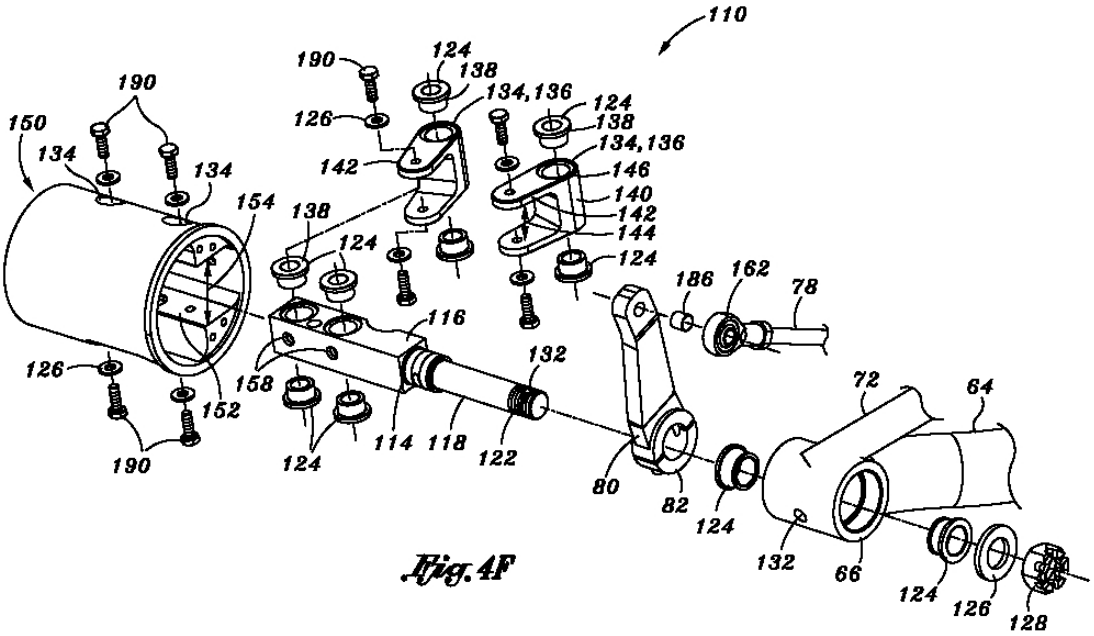

**Here is picture comparing the Vertical Steering Axis to the conventional angled steering axis:**

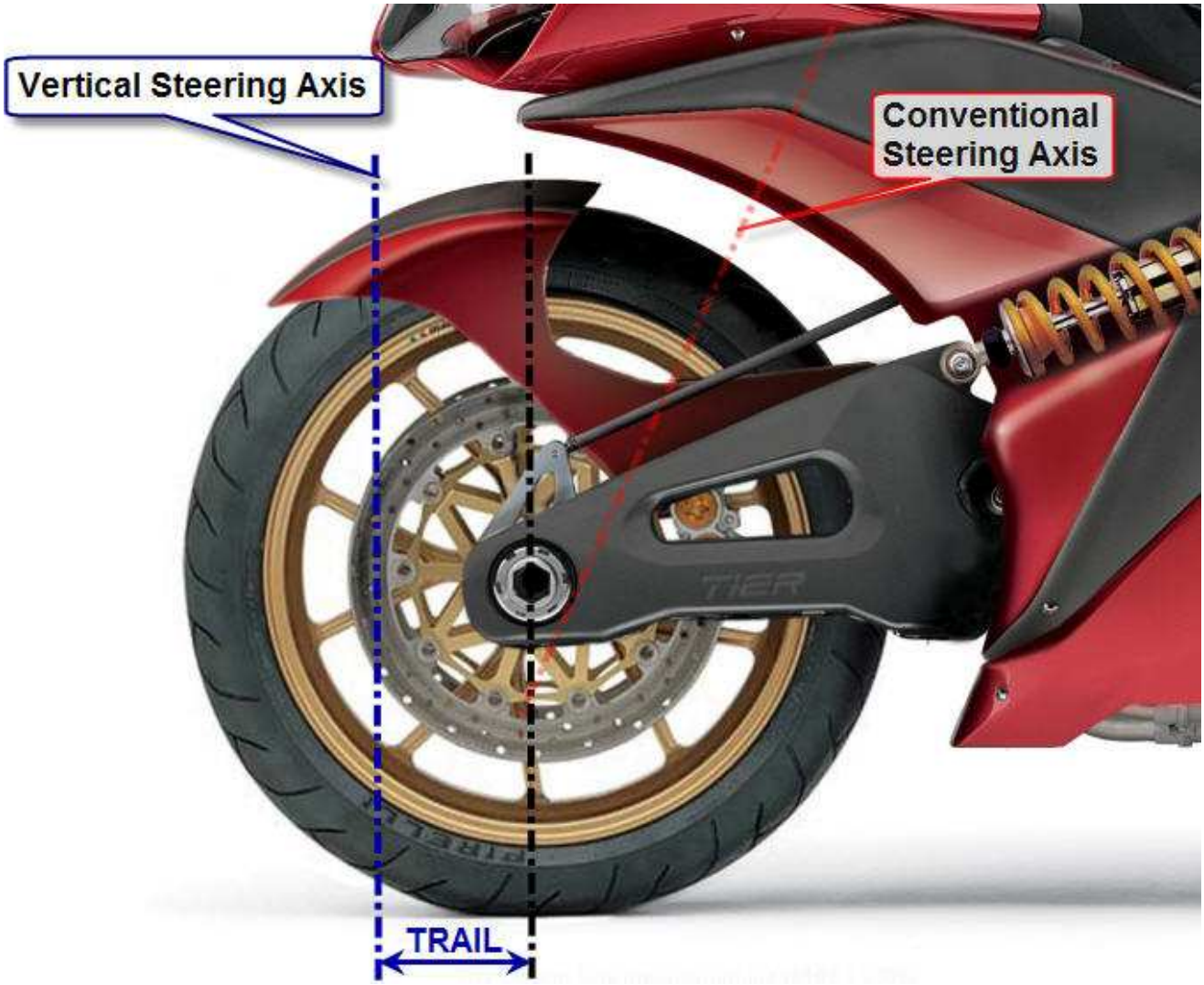

**The following sketch is an horizontal cross section cutting the front wheel right above the *Four-Bar Steering Mechanism*™ and looking down at it. It shows how the "virtual steering axis" is found by extending a line going through the follower links. Where the lines meet is the point "C" to which the wheel will steer about. This allows the use of a much smaller wheel hub to achieve the benefits of a <u>vertical steering axis</u>.**